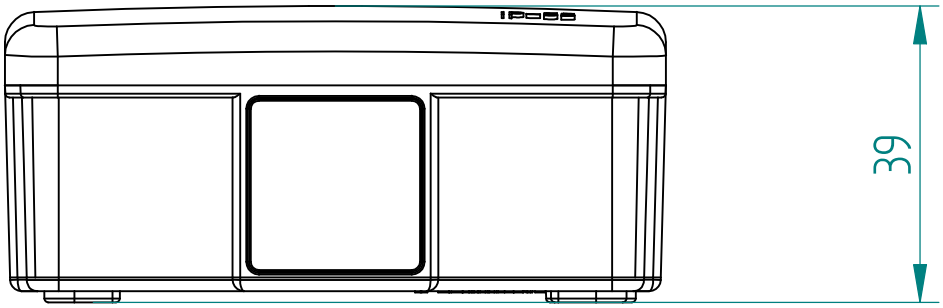

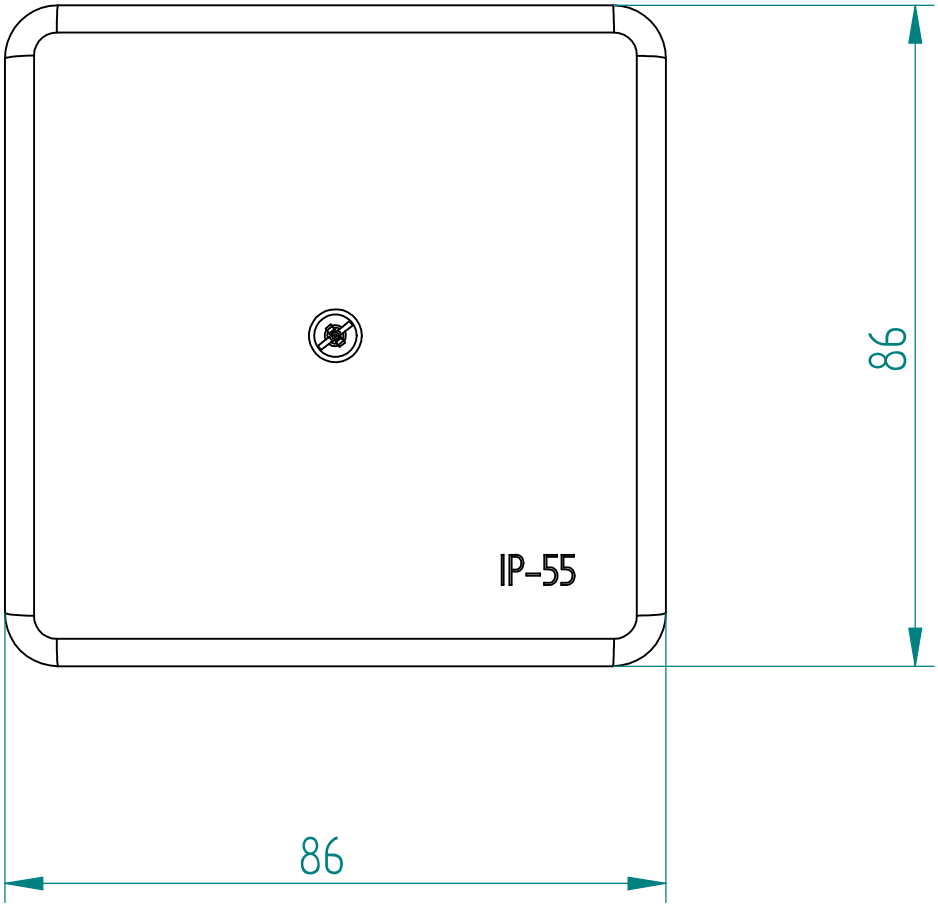

Created by K on 16.05.2012